UNIVERSITY OF CAMBRIDGE INTERNATIONAL EXAMINATIONS
General Certificate of Education
Advanced Subsidiary Level and Advanced Level

| | | | | | | | | | |
|---|---|---|---|---|---|---|---|---|---|
| CANDIDATE NAME | | | | | | | | | |
| CENTRE NUMBER | | | | | | CANDIDATE NUMBER | | | | |

*2349041106*

**PHYSICS** **9702/02**

Paper 2 AS Structured Questions **May/June 2008**

**1 hour**

Candidates answer on the Question Paper.

No Additional Materials are required.

**READ THESE INSTRUCTIONS FIRST**

Write your Centre number, candidate number and name on all the work you hand in.
Write in dark blue or black pen.
You may use a soft pencil for any diagrams, graphs or rough working.
Do not use staples, paper clips, highlighters, glue or correction fluid.
DO **NOT** WRITE IN ANY BARCODES.

Answer **all** questions.
You may lose marks if you do not show your working or if you do not use appropriate units.

At the end of the examination, fasten all your work securely together.
The number of marks is given in brackets [ ] at the end of each question or part question.

| For Examiner's Use | |
|---|---|
| 1 | |
| 2 | |
| 3 | |
| 4 | |
| 5 | |
| 6 | |
| 7 | |
| Total | |

This document consists of **17** printed pages and **3** blank pages.


© UCLES 2008

**Data**

| | |
|---|---|
| speed of light in free space, | $c = 3.00 \times 10^{8}\ \text{m s}^{-1}$ |
| permeability of free space, | $\mu_0 = 4\pi \times 10^{-7}\ \text{H m}^{-1}$ |
| permittivity of free space, | $\varepsilon_0 = 8.85 \times 10^{-12}\ \text{F m}^{-1}$ |
| elementary charge, | $e = 1.60 \times 10^{-19}\ \text{C}$ |
| the Planck constant, | $h = 6.63 \times 10^{-34}\ \text{J s}$ |
| unified atomic mass constant, | $u = 1.66 \times 10^{-27}\ \text{kg}$ |
| rest mass of electron, | $m_e = 9.11 \times 10^{-31}\ \text{kg}$ |
| rest mass of proton, | $m_p = 1.67 \times 10^{-27}\ \text{kg}$ |
| molar gas constant, | $R = 8.31\ \text{J K}^{-1}\ \text{mol}^{-1}$ |
| the Avogadro constant, | $N_A = 6.02 \times 10^{23}\ \text{mol}^{-1}$ |
| the Boltzmann constant, | $k = 1.38 \times 10^{-23}\ \text{J K}^{-1}$ |
| gravitational constant, | $G = 6.67 \times 10^{-11}\ \text{N m}^2\ \text{kg}^{-2}$ |
| acceleration of free fall, | $g = 9.81\ \text{m s}^{-2}$ |

© UCLES 2008

**Formulae**

uniformly accelerated motion, $s = ut + \frac{1}{2}at^2$
$v^2 = u^2 + 2as$

work done on/by a gas, $W = p\Delta V$

gravitational potential, $\phi = -\frac{Gm}{r}$

hydrostatic pressure, $p = \rho gh$

pressure of an ideal gas, $p = \frac{1}{3}\frac{Nm}{V}<c^2>$

simple harmonic motion, $a = -\omega^2 x$

velocity of particle in s.h.m., $v = v_0 \cos \omega t$
$v = \pm \omega \sqrt{(x_0^2 - x^2)}$

electric potential, $V = \frac{Q}{4\pi\varepsilon_0 r}$

capacitors in series, $1/C = 1/C_1 + 1/C_2 + \ldots$

capacitors in parallel, $C = C_1 + C_2 + \ldots$

energy of charged capacitor, $W = \frac{1}{2}QV$

resistors in series, $R = R_1 + R_2 + \ldots$

resistors in parallel, $1/R = 1/R_1 + 1/R_2 + \ldots$

alternating current/voltage, $x = x_0 \sin \omega t$

radioactive decay, $x = x_0 \exp(-\lambda t)$

decay constant, $\lambda = \frac{0.693}{t_{\frac{1}{2}}}$

© UCLES 2008

Answer **all** the questions in the spaces provided.

**1** Make reasonable estimates of the following quantities.

**(a)** the frequency of an audible sound wave

frequency = ..... Hz [1]

**(b)** the wavelength, in nm, of ultraviolet radiation

wavelength = ..... nm [1]

**(c)** the mass of a plastic 30 cm ruler

mass = ..... g [1]

**(d)** the density of air at atmospheric pressure

density = ..... kg $m^{-3}$ [1]

© UCLES 2008

**2** A spring is placed on a flat surface and different weights are placed on it, as shown in Fig. 2.1.

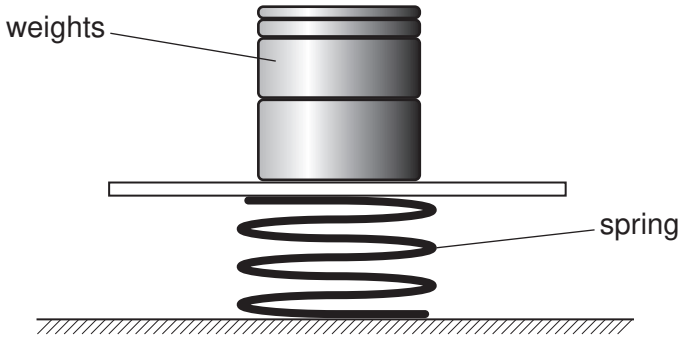


**Fig. 2.1**

The variation with weight of the compression of the spring is shown in Fig. 2.2.

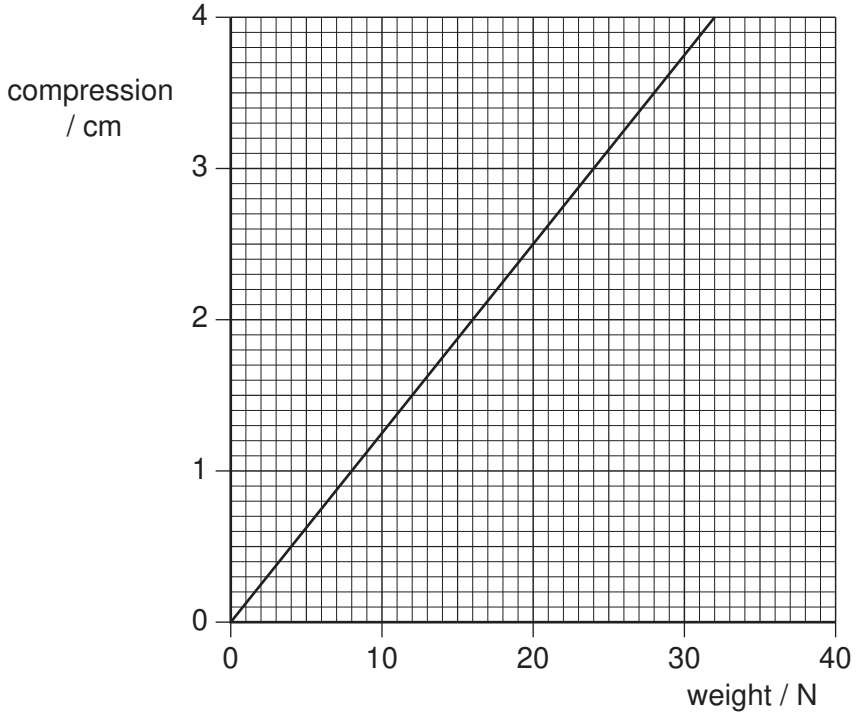


**Fig. 2.2**

The elastic limit of the spring has not been exceeded.

**(a) (i)** Determine the spring constant $k$ of the spring.

$k$ = ..... $N\,m^{-1}$ [2]

**(ii)** Deduce that the strain energy stored in the spring is 0.49 J for a compression of 3.5 cm.

[2]

**(b)** Two trolleys, of masses 800 g and 2400 g, are free to move on a horizontal table. The spring in **(a)** is placed between the trolleys and the trolleys are tied together using thread so that the compression of the spring is 3.5 cm, as shown in Fig. 2.3.

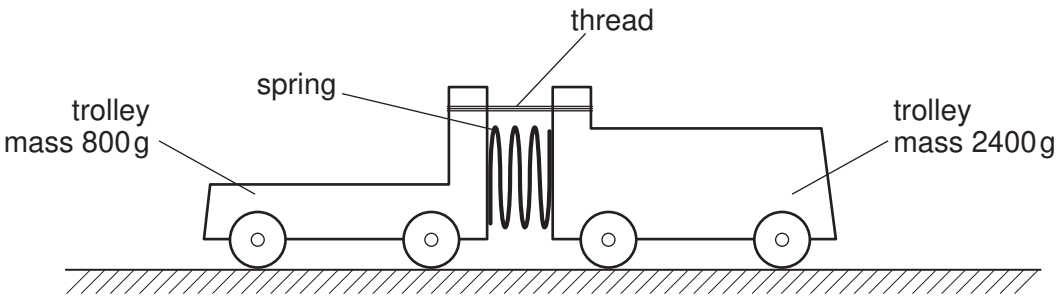


**Fig. 2.3**

Initially, the trolleys are not moving.
The thread is then cut and the trolleys move apart.

**(i)** Deduce that the ratio

$$\frac{\text{speed of trolley of mass 800 g}}{\text{speed of trolley of mass 2400 g}}$$

is equal to 3.0.

[2]

**(ii)** Use the answers in **(a)(ii)** and **(b)(i)** to calculate the speed of the trolley of mass 800 g.

speed = ..... $m\,s^{-1}$ [3]

**3** A shopping trolley and its contents have a total mass of 42 kg. The trolley is being pushed along a horizontal surface at a speed of 1.2 m s$^{-1}$. When the trolley is released, it travels a distance of 1.9 m before coming to rest.

**(a)** Assuming that the total force opposing the motion of the trolley is constant,

**(i)** calculate the deceleration of the trolley,

deceleration = ..... m s$^{-2}$ [2]

**(ii)** show that the total force opposing the motion of the trolley is 16 N.

[1]

**(b)** Using the answer in **(a)(ii)**, calculate the power required to overcome the total force opposing the motion of the trolley at a speed of 1.2 m s$^{-1}$.

power = ..... W [2]

© UCLES 2008

**(c)** The trolley now moves down a straight slope that is inclined at an angle of 2.8° to the horizontal, as shown in Fig. 3.1.

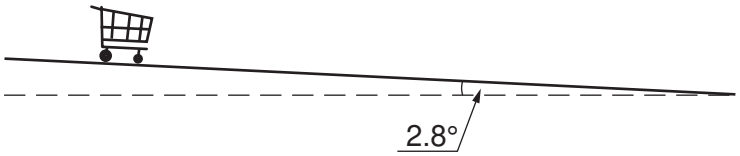


**Fig. 3.1**

The constant force that opposes the motion of the trolley is 16 N.

Calculate, for the trolley moving down the slope,

**(i)** the component down the slope of the trolley's weight,

component of weight = ..... N [2]

**(ii)** the time for the trolley to travel from rest a distance of 3.5 m along the length of the slope.

time = ..... s [4]

**(d)** Use your answer to **(c)(ii)** to explain why, for safety reasons, the slope is not made any steeper.

.....

.....[1]

**4** **(a)** **(i)** Define the terms

**1.** tensile stress,

.....

.....[1]

**2.** tensile strain,

.....

.....[1]

**3.** the Young modulus.

.....

.....[1]

**(ii)** Suggest why the Young modulus is not used to describe the deformation of a liquid or a gas.

.....

.....[1]

**(b)** The change $\Delta V$ in the volume $V$ of some water when the pressure on the water increases by $\Delta p$ is given by the expression

$$\Delta p = 2.2 \times 10^9 \frac{\Delta V}{V},$$

where $\Delta p$ is measured in pascal.
In many applications, water is assumed to be incompressible.
By reference to the expression, justify this assumption.

.....

.....

.....[2]

© UCLES 2008

**(c)** Normal atmospheric pressure is $1.01 \times 10^5$ Pa.

Divers in water of density $1.08 \times 10^3 \text{ kg m}^{-3}$ frequently use an approximation that every 10 m increase in depth of water is equivalent to one atmosphere increase in pressure. Determine the percentage error in this approximation.

error = ..... % [3]

**5** **(a)** State what is meant by

**(i)** the *frequency* of a progressive wave,

.....

.....

.....[2]

**(ii)** the *speed* of a progressive wave.

.....

.....[1]

**(b)** One end of a long string is attached to an oscillator. The string passes over a frictionless pulley and is kept taut by means of a weight, as shown in Fig. 5.1.

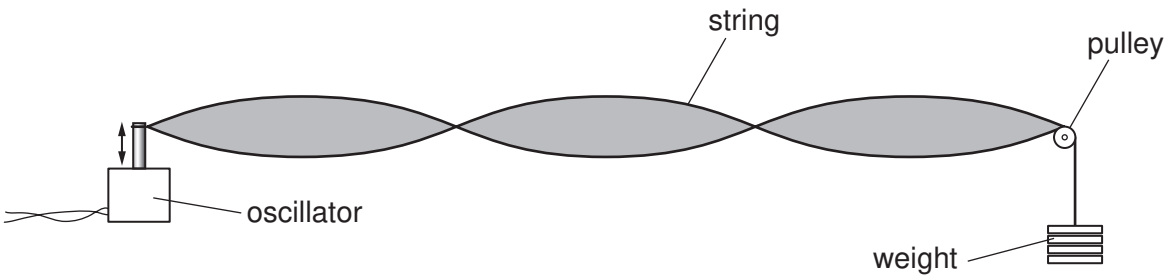


**Fig. 5.1**

The frequency of oscillation is varied and, at one value of frequency, the wave formed on the string is as shown in Fig. 5.1.

**(i)** Explain why the wave is said to be a *stationary wave*.

.....

.....[1]

**(ii)** State what is meant by an *antinode*.

.....

.....[1]

**(iii)** On Fig. 5.1, label the antinodes with the letter A. [1]

© UCLES 2008

**(c)** A weight of 4.00 N is hung from the string in **(b)** and the frequency of oscillation is adjusted until a stationary wave is formed on the string. The separation of the antinodes on the string is 17.8 cm for a frequency of 125 Hz.
The speed $v$ of waves on a string is given by the expression

$$v = \sqrt{\frac{T}{m}} \ ,$$

where $T$ is the tension in the string and $m$ is its mass per unit length.
Determine the mass per unit length of the string.

mass per unit length = ..... $kg\,m^{-1}$ [5]

**6** An electric heater consists of three similar heating elements A, B and C, connected as shown in Fig. 6.1.

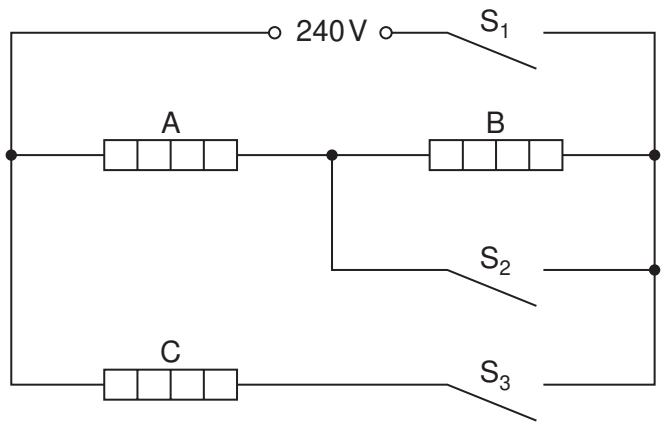


**Fig. 6.1**

Each heating element is rated as 1.5 kW, 240 V and may be assumed to have constant resistance.
The circuit is connected to a 240 V supply.

**(a)** Calculate the resistance of one heating element.

resistance = …….. Ω [2]

© UCLES 2008

**(b)** The switches $S_1$, $S_2$ and $S_3$ may be either open or closed.

Complete Fig. 6.2 to show the total power dissipation of the heater for the switches in the positions indicated.

| $S_1$ | $S_2$ | $S_3$ | total power / kW |
|---|---|---|---|
| open | closed | closed | ..... |
| closed | closed | open | ..... |
| closed | closed | closed | ..... |
| closed | open | open | ..... |
| closed | open | closed | ..... |

[5]

**Fig. 6.2**

**7** Uranium-236 ($^{236}_{92}U$) and Uranium-237 ($^{237}_{92}U$) are both radioactive.
Uranium-236 is an $\alpha$-emitter and Uranium-237 is a $\beta$-emitter.

**(a)** Distinguish between an $\alpha$-particle and a $\beta$-particle.

.....

.....

.....

.....

.....

.....[4]

**(b)** The grid of Fig. 7.1 shows some proton numbers $Z$ on the $x$-axis and the number $N$ of neutrons in the nucleus on the $y$-axis.

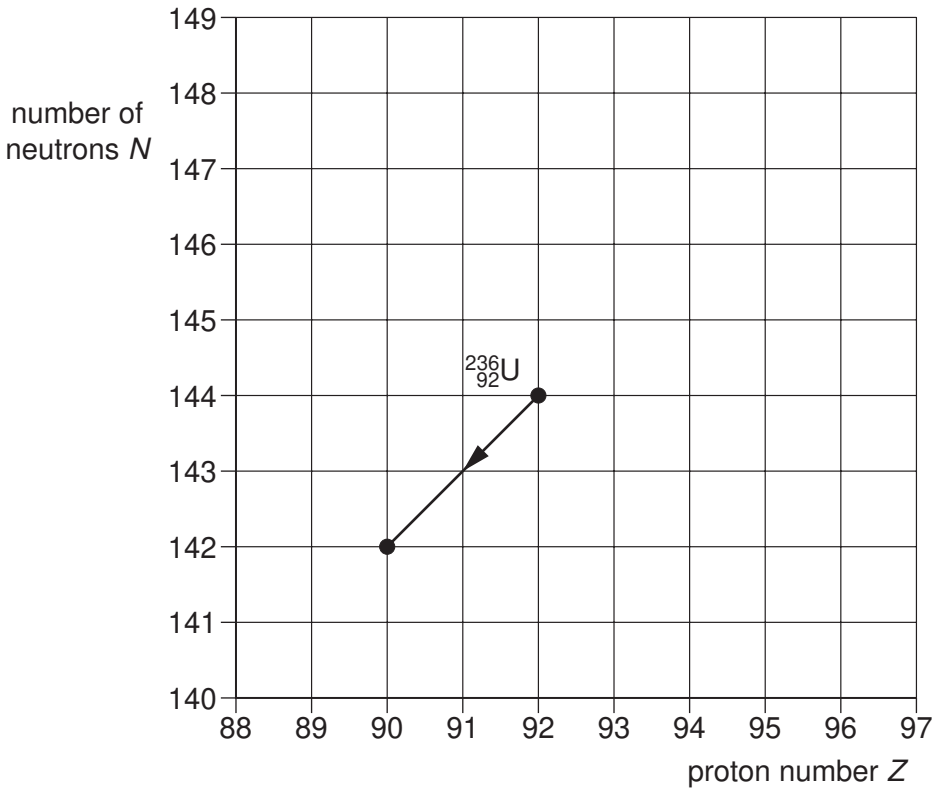


**Fig. 7.1**

The $\alpha$-decay of Uranium-236 ($^{236}_{92}U$) is represented on the grid. This decay produces a nucleus of thorium (Th).

**(i)** Write down the nuclear equation for this $\alpha$-decay.

.....[2]

**(ii)** On Fig. 7.1, mark the position for a nucleus of

**1.** Uranium-237 (mark this position with the letter U),

**2.** Neptunium, the nucleus produced by the $\beta$-decay of Uranium-237 (mark this position with the letters Np). [2]

**BLANK PAGE**

**BLANK PAGE**

**BLANK PAGE**

Permission to reproduce items where third-party owned material protected by copyright is included has been sought and cleared where possible. Every reasonable effort has been made by the publisher (UCLES) to trace copyright holders, but if any items requiring clearance have unwittingly been included, the publisher will be pleased to make amends at the earliest possible opportunity.

University of Cambridge International Examinations is part of the Cambridge Assessment Group. Cambridge Assessment is the brand name of University of Cambridge Local Examinations Syndicate (UCLES), which is itself a department of the University of Cambridge.